CLASSIC FRIDGE

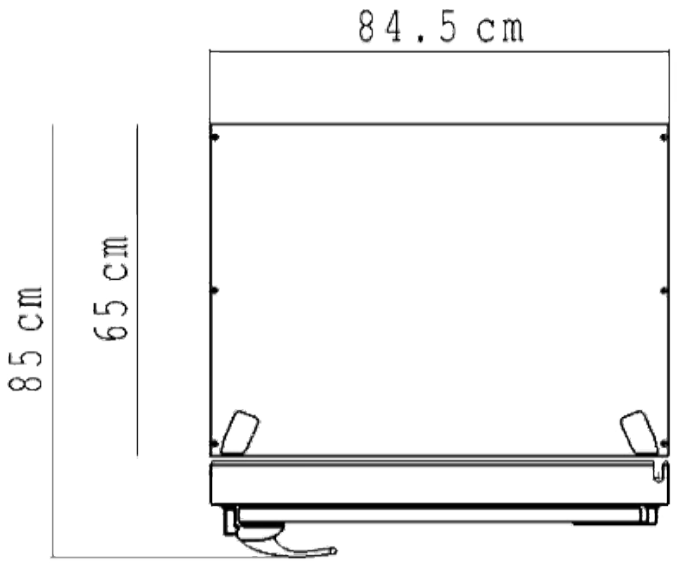

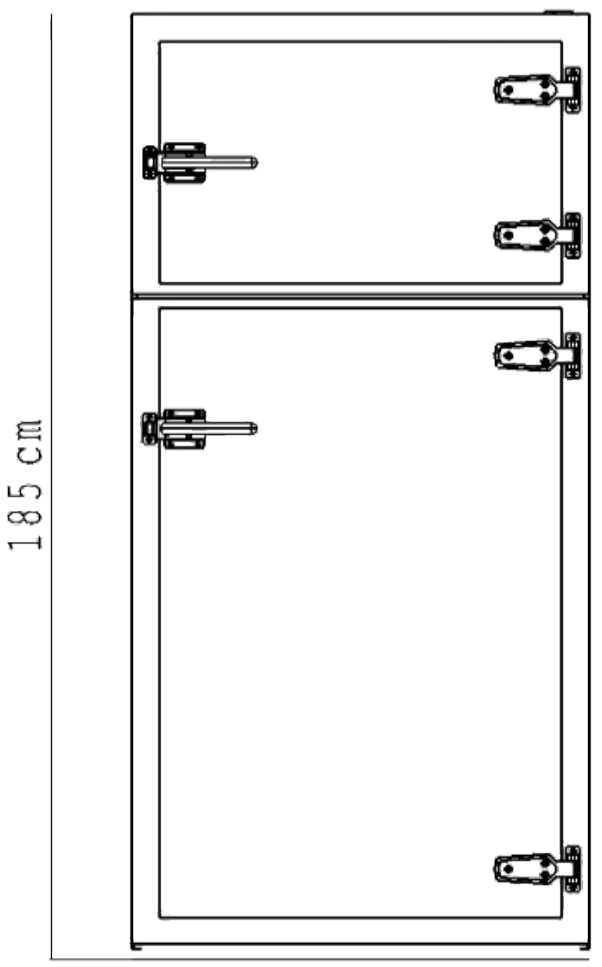

Total Net Volume	590L
Fresh Food Net Volume	445L
Chill Compartment Net Volume	142L
Clearance Back	0 cm
Clearance Side	0 cm
Side Clearance door to open90°	12.4 cm
Adjustable Rollers	Standard
Annual Energy Consumption (kwh/yr)	296
Energy Efficiency Class	E
Electrical	220-240, 50hz
Airborne Acoustical Noise Emission (db)	41